SOLAR MODULES

YI-100M

Specifications

Cell Type	Mono-Silicon solar Cells
Cell Size	125mm×125mm
No. of cells and connections	36(4×9)
Dimension of module(mm)	1199×543×30mm
Weight	8.0Kg

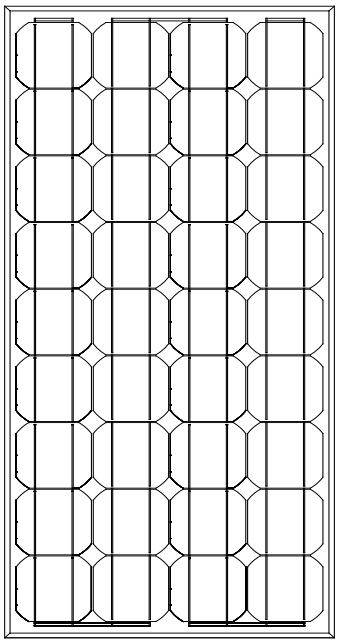

Electrical Characteristics

Model	YI-100M
Maximum power at STC(Pm)	100W
Open-circuit voltage(Voc)	22.50V
Short-circuit current(Isc)	5.60A
Voltage at Pmax(Vmp)	18.58V
Current at Pmax(Imp)	5.38A
Application	DC 12V system

（STC:Irrandiance AM1.5，1000W/m2，25℃）

Limits

Fuse rating	10A
Maximum system voltage	715VDC
Operating temperature	-40~+85℃

Temperature and Coefficients

NOCT	45℃±2℃
Temp coefficient of Voc	-0.30%/℃
Temp coefficient of Isc	0.037%/℃
Temp coefficient of power	-0.45%/℃

NOCT:Nominal Operation Cell Temperature

Output

Type of output terminal	Junction box
Cable	$4mm^2$
Cable lengths	800mm
Connecter	Plug type

Characteristics Curve

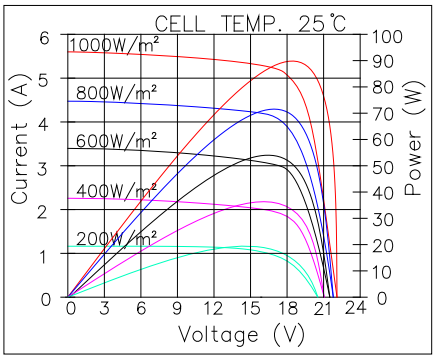
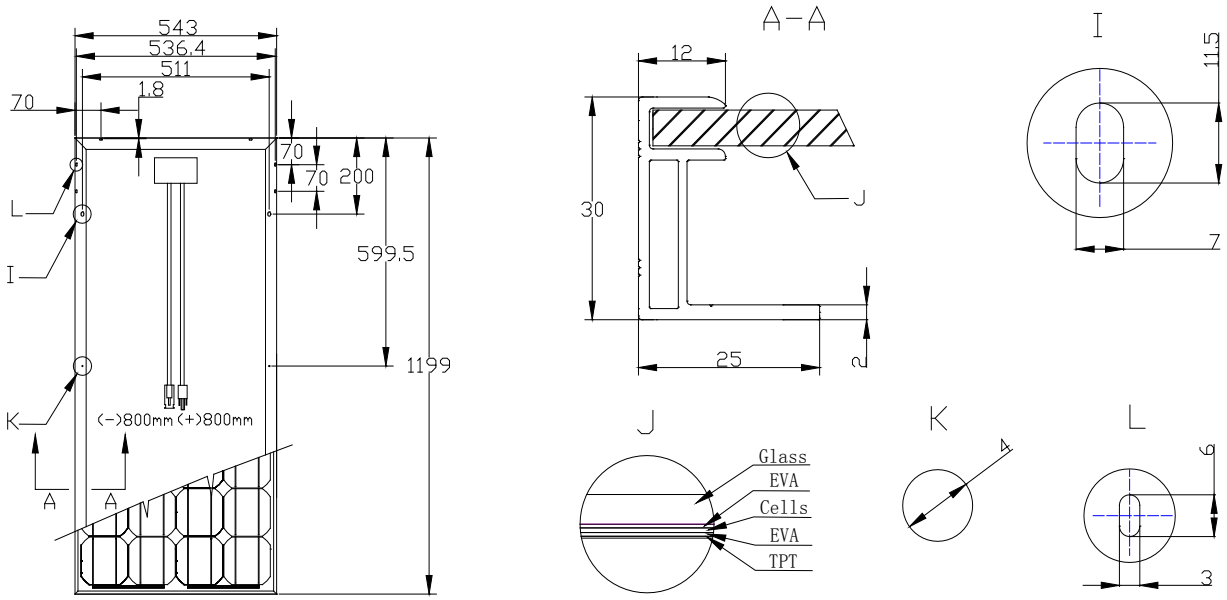
Mechanical Characteristics